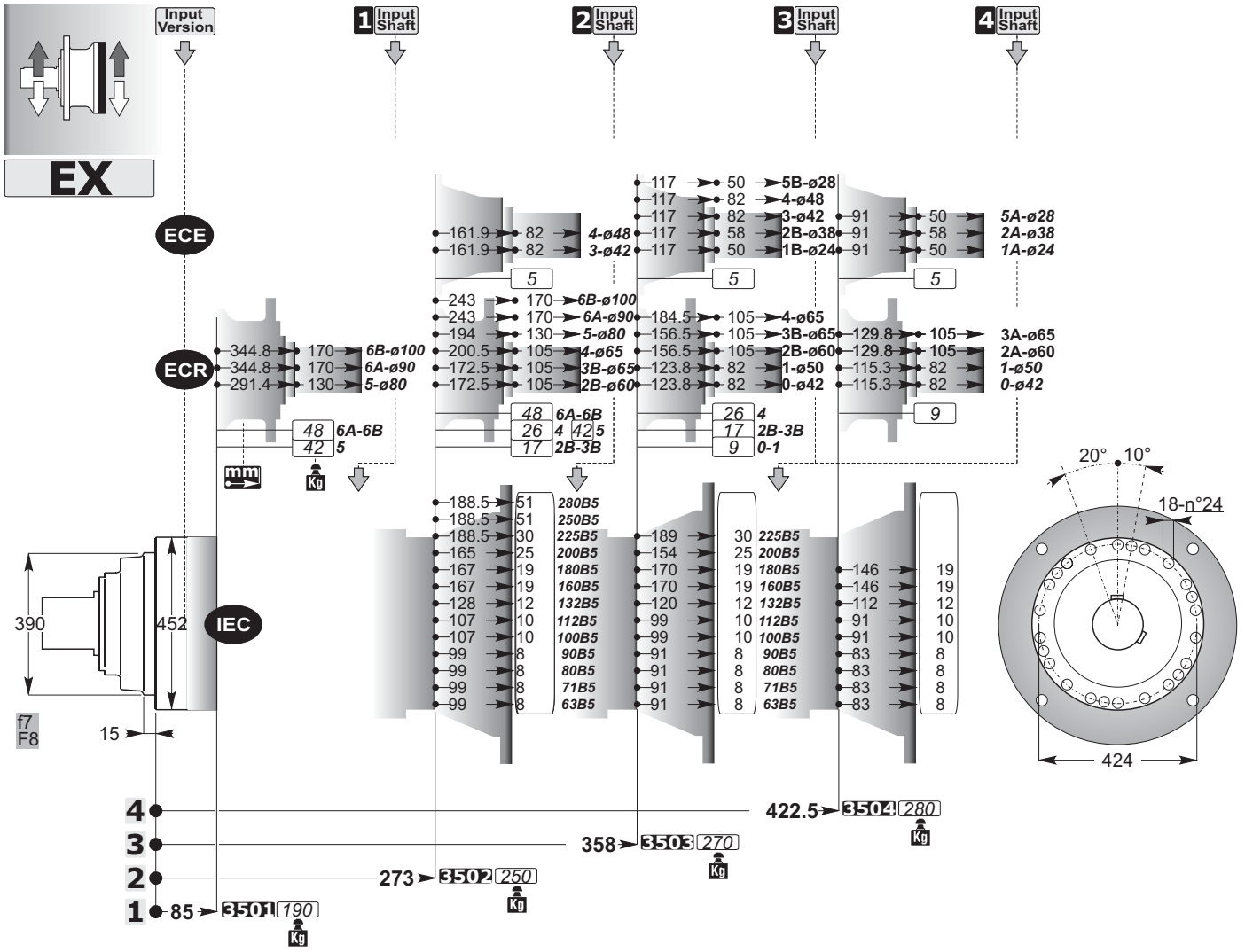
Input Version
1 Input Shaft
2 Input Shaft
3 Input Shaft
4 Input Shaft
EX
ECE
ECR
IEC
390
452
f7
F8
15
161.9 82 4-ø48
161.9 82 3-ø42
5
243 170 6B-ø100
243 170 6A-ø90
194 130 5-ø80
200.5 105 4-ø65
172.5 105 3B-ø65
172.5 105 2B-ø60
344.8 170 6B-ø100
344.8 170 6A-ø90
291.4 130 5-ø80
48 6A-6B
42 5
48 6A-6B
26 4 42 5
17 2B-3B
117 50 5B-ø28
117 82 4-ø48
117 82 3-ø42
117 58 2B-ø38
117 50 1B-ø24
5
184.5 105 4-ø65
156.5 105 3B-ø65
156.5 105 2B-ø60
123.8 82 1-ø50
123.8 82 0-ø42
26 4
17 2B-3B
9 0-1
91 50 5A-ø28
91 58 2A-ø38
91 50 1A-ø24
5
129.8 105 3A-ø65
129.8 105 2A-ø60
115.3 82 1-ø50
115.3 82 0-ø42
9
188.5 51 280B5
188.5 51 250B5
188.5 30 225B5
165 25 200B5
167 19 180B5
167 19 160B5
128 12 132B5
107 10 112B5
107 10 100B5
99 8 90B5
99 8 80B5
99 8 71B5
99 8 63B5
189 30 225B5
154 25 200B5
170 19 180B5
170 19 160B5
120 12 132B5
99 10 112B5
99 10 100B5
91 8 90B5
91 8 80B5
91 8 71B5
91 8 63B5
146 19
146 19
112 12
91 10
91 10
83 8
83 8
83 8
83 8
20° 10°
18-n°24
424
4
3
2
1
422.5 3504 280
358 3503 270
273 3502 250
85 3501 190
Kg

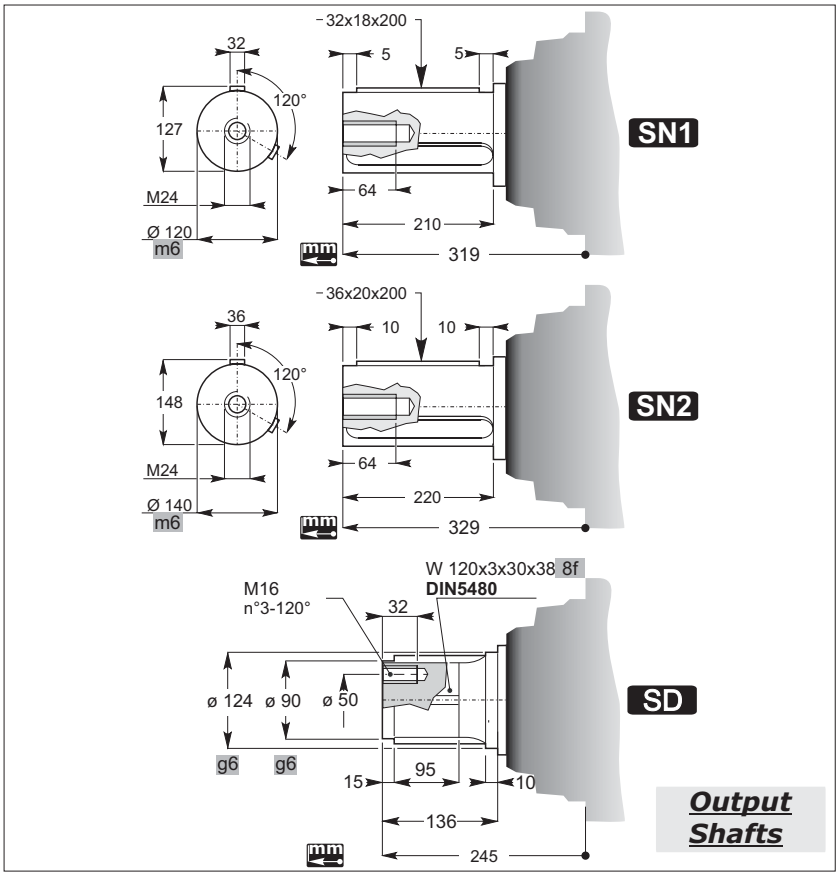
32x18x200
32
5
5
120°
127
M24
Ø 120
m6
64
210
319
SN1
36x20x200
36
10
10
120°
148
M24
Ø 140
m6
64
220
329
SN2
W 120x3x30x38 8f
DIN5480
M16
n°3-120°
32
ø 124
ø 90
ø 50
g6
g6
15
95
10
136
245
SD
Output Shafts

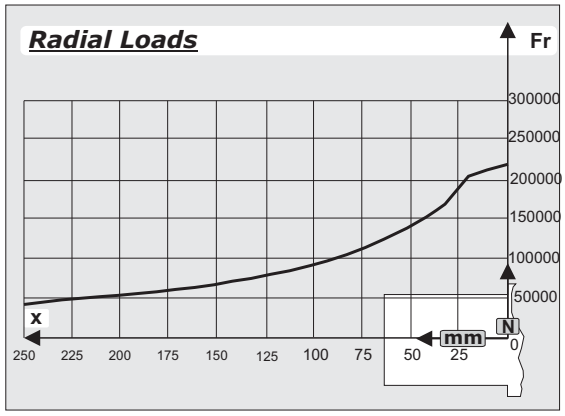
Radial Loads
Fr
300000
250000
200000
150000
100000
50000
0
x
250
225
200
175
150
125
100
75
50
25
mm
N

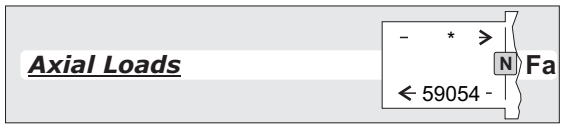
Axial Loads
N
Fa
59054

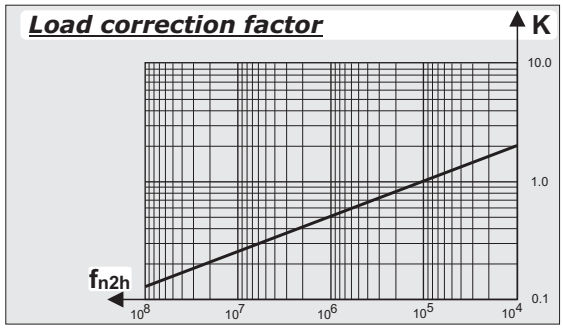
Load correction factor
K
10.0
1.0
0.1
fn2h
10^8
10^7
10^6
10^5
10^4

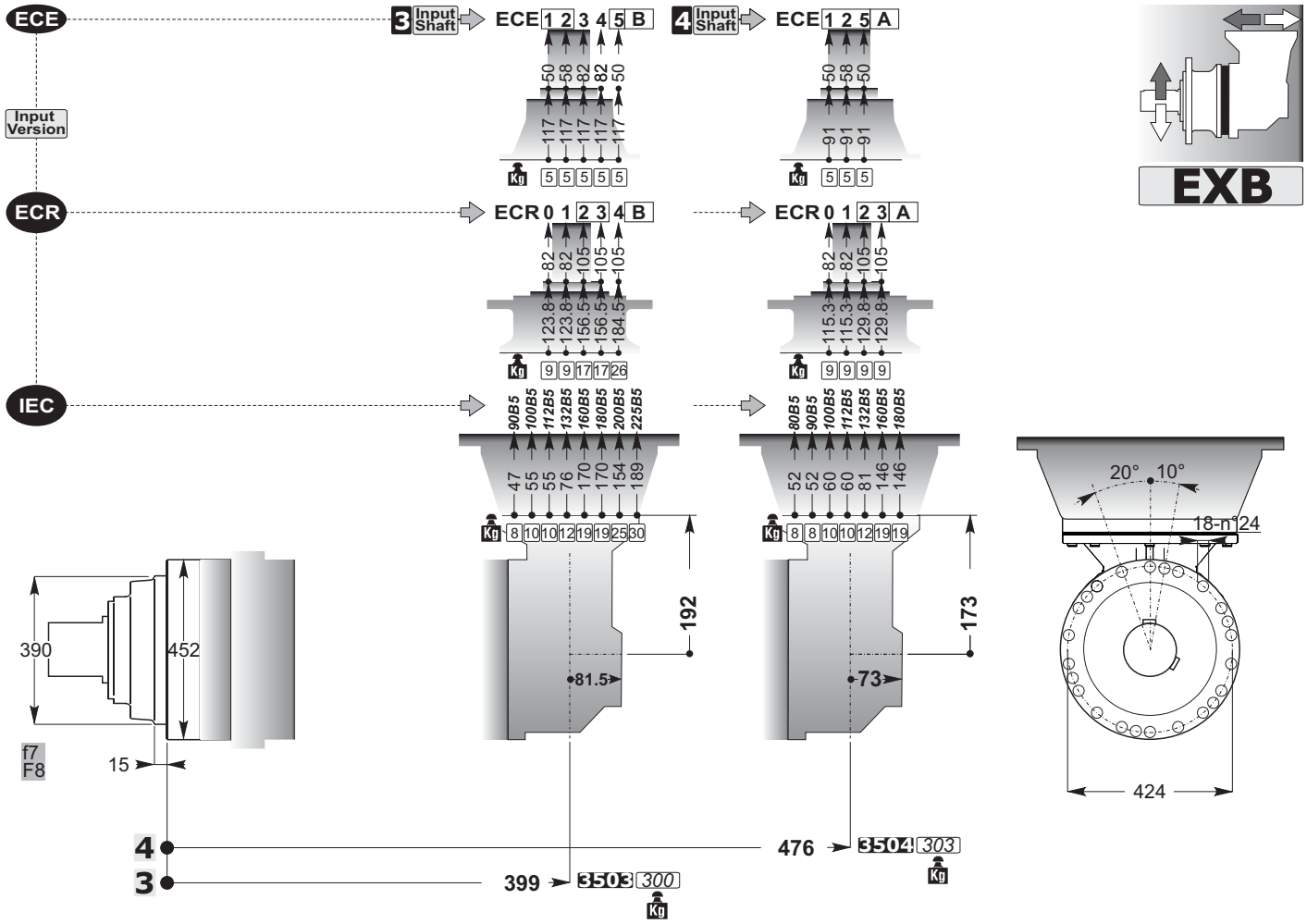
ECE
Input Version
ECR
IEC
3 Input Shaft
ECE 1 2 3 4 5 B
4 Input Shaft
ECE 1 2 5 A
ECR 0 1 2 3 4 B
ECR 0 1 2 3 A
EXB
390
452
f7
F8
15
192
81.5
173
73
20°
10°
18-n124
424
476
3504 303
399
3503 300

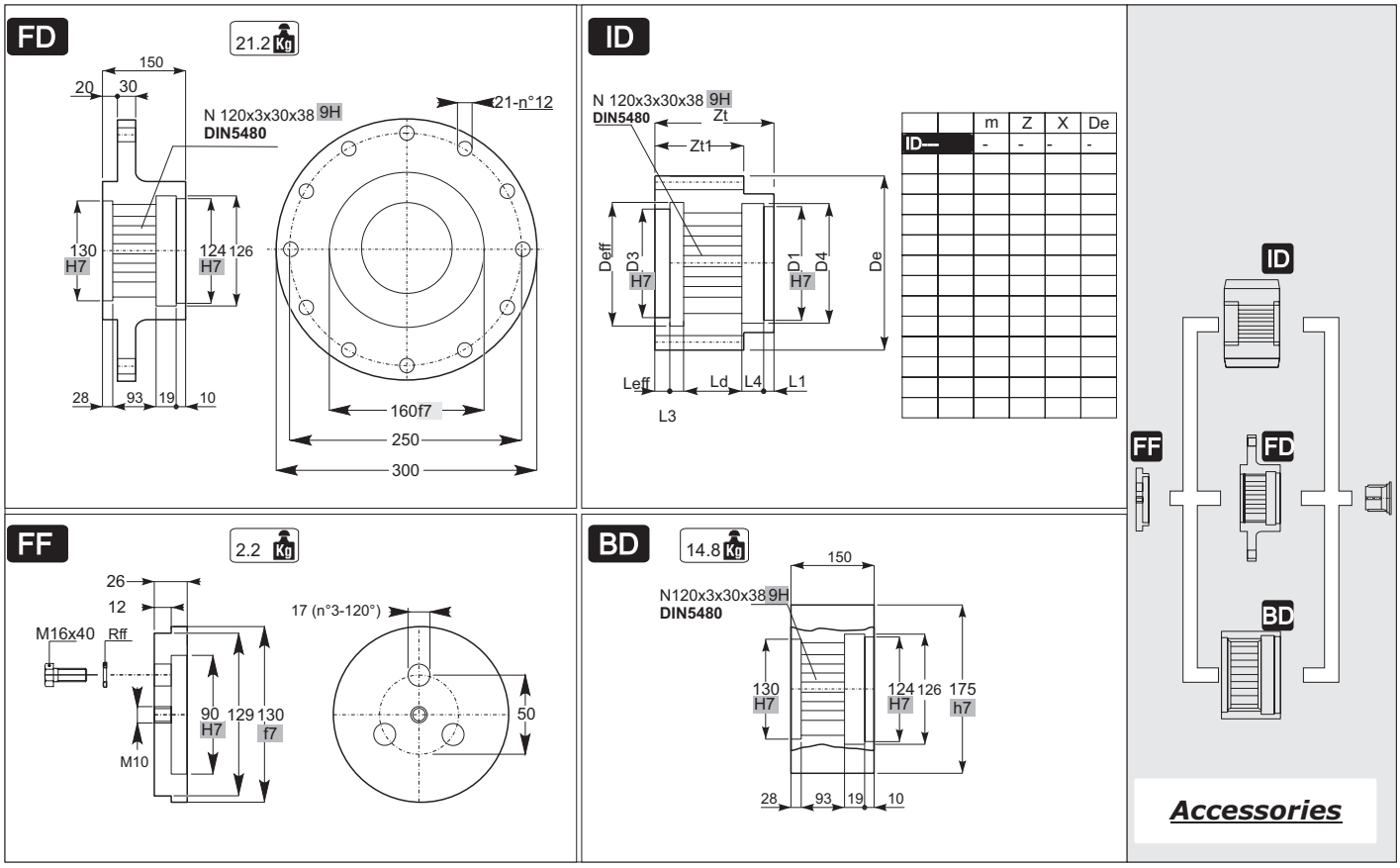
FD
21.2 Kg
150
20
30
N 120x3x30x38 9H
DIN5480
21-n°12
130 H7
124 H7
126
28
93
19
10
160f7
250
300
ID
N 120x3x30x38 9H
DIN5480
Zt
Zt1
Deff
D3 H7
D1 H7
D4
De
Leff
Ld
L4
L1
L3
m
Z
X
De
ID—
FF
2.2 Kg
26
12
M16x40
Rff
17 (n°3-120°)
90 H7
129
130 f7
50
M10
BD
14.8 Kg
150
N120x3x30x38 9H
DIN5480
130 H7
124 H7
126
175 h7
28
93
19
10
ID
FF
FD
BD
Accessories

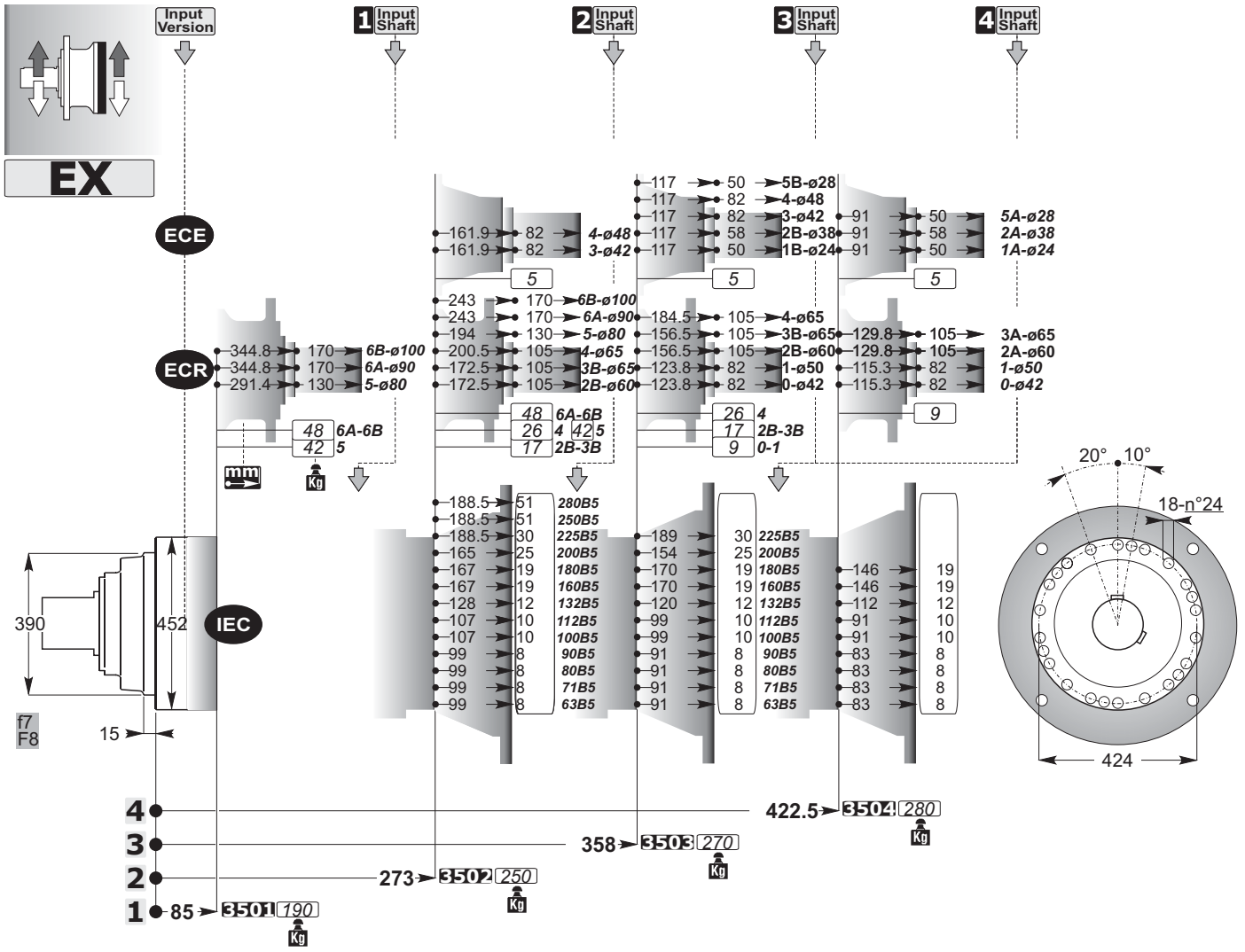
Input Version
1 Input Shaft
2 Input Shaft
3 Input Shaft
4 Input Shaft
EX
ECE
ECR
IEC
390
452
f7
F8
15
161.9 82 4-ø48
161.9 82 3-ø42
5
243 170 6B-ø100
243 170 6A-ø90
194 130 5-ø80
200.5 105 4-ø65
172.5 105 3B-ø65
172.5 105 2B-ø60
48 6A-6B
26 4 42 5
17 2B-3B
344.8 170 6B-ø100
344.8 170 6A-ø90
291.4 130 5-ø80
48 6A-6B
42 5
117 50 5B-ø28
117 82 4-ø48
117 82 3-ø42
117 58 2B-ø38
117 50 1B-ø24
5
184.5 105 4-ø65
156.5 105 3B-ø65
156.5 105 2B-ø60
123.8 82 1-ø50
123.8 82 0-ø42
26 4
17 2B-3B
9 0-1
91 50 5A-ø28
91 58 2A-ø38
91 50 1A-ø24
5
129.8 105 3A-ø65
129.8 105 2A-ø60
115.3 82 1-ø50
115.3 82 0-ø42
9
188.5 51 280B5
188.5 51 250B5
188.5 30 225B5
165 25 200B5
167 19 180B5
167 19 160B5
128 12 132B5
107 10 112B5
107 10 100B5
99 8 90B5
99 8 80B5
99 8 71B5
99 8 63B5
189 30 225B5
154 25 200B5
170 19 180B5
170 19 160B5
120 12 132B5
99 10 112B5
99 10 100B5
91 8 90B5
91 8 80B5
91 8 71B5
91 8 63B5
146 19
146 19
112 12
91 10
91 10
83 8
83 8
83 8
83 8
20° 10°
18-n°24
424
4
3
2
1
422.5 3504 280
358 3503 270
273 3502 250
85 3501 190
Kg

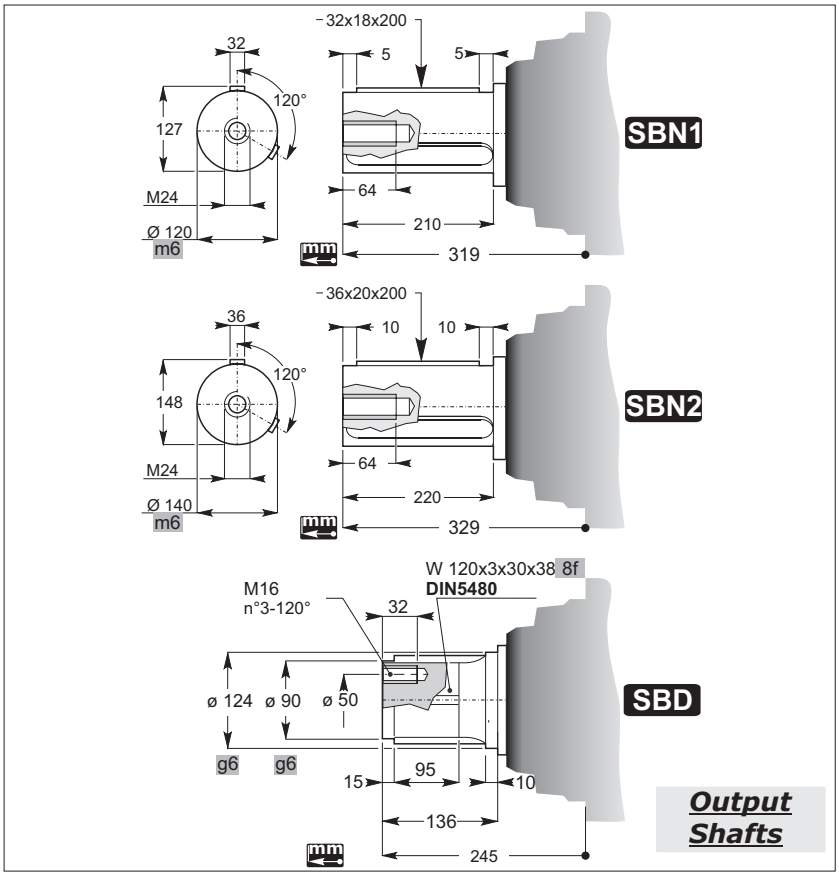
32x18x200
32
5
5
120°
127
M24
Ø 120
m6
64
210
319
SBN1
36x20x200
36
10
10
120°
148
M24
Ø 140
m6
64
220
329
SBN2
W 120x3x30x38 8f
DIN5480
M16
n°3-120°
32
ø 124
ø 90
ø 50
g6
g6
15
95
10
136
245
SBD
Output Shafts

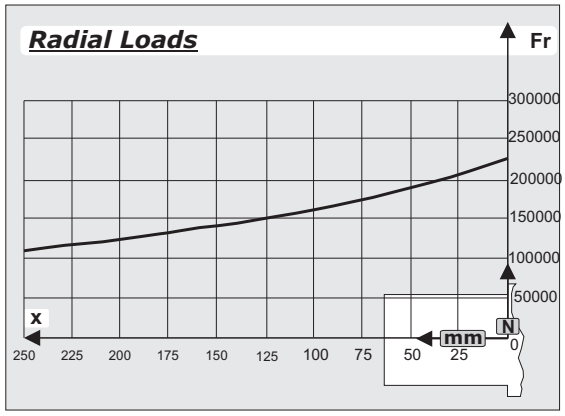
Radial Loads
Fr
300000
250000
200000
150000
100000
50000
0
x
250
225
200
175
150
125
100
75
50
25
mm
N

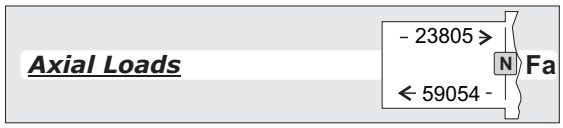
Axial Loads
23805
N
Fa
59054

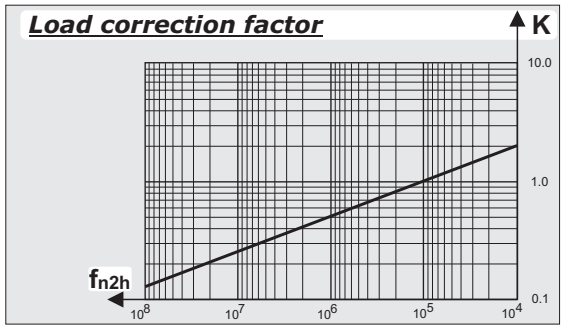
Load correction factor
K
10.0
1.0
0.1
fn2h
10^8
10^7
10^6
10^5
10^4

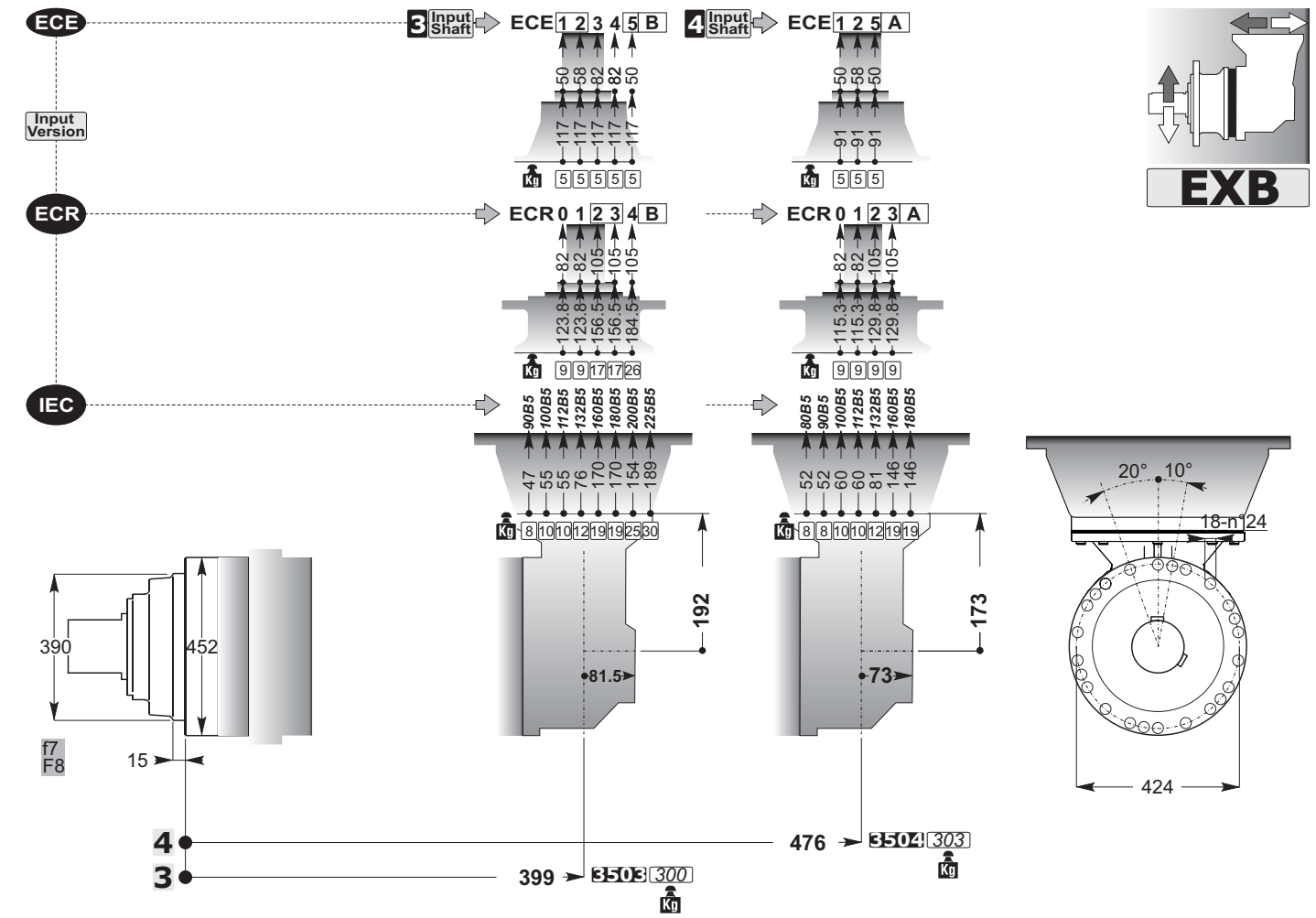
ECE
Input Version
ECR
IEC
3 Input Shaft
ECE 1 2 3 4 5 B
4 Input Shaft
ECE 1 2 5 A
ECR 0 1 2 3 4 B
ECR 0 1 2 3 A
EXB
390
452
f7
F8
15
192
81.5
173
73
20°
10°
18-n124
424
476
3504 303
399
3503 300

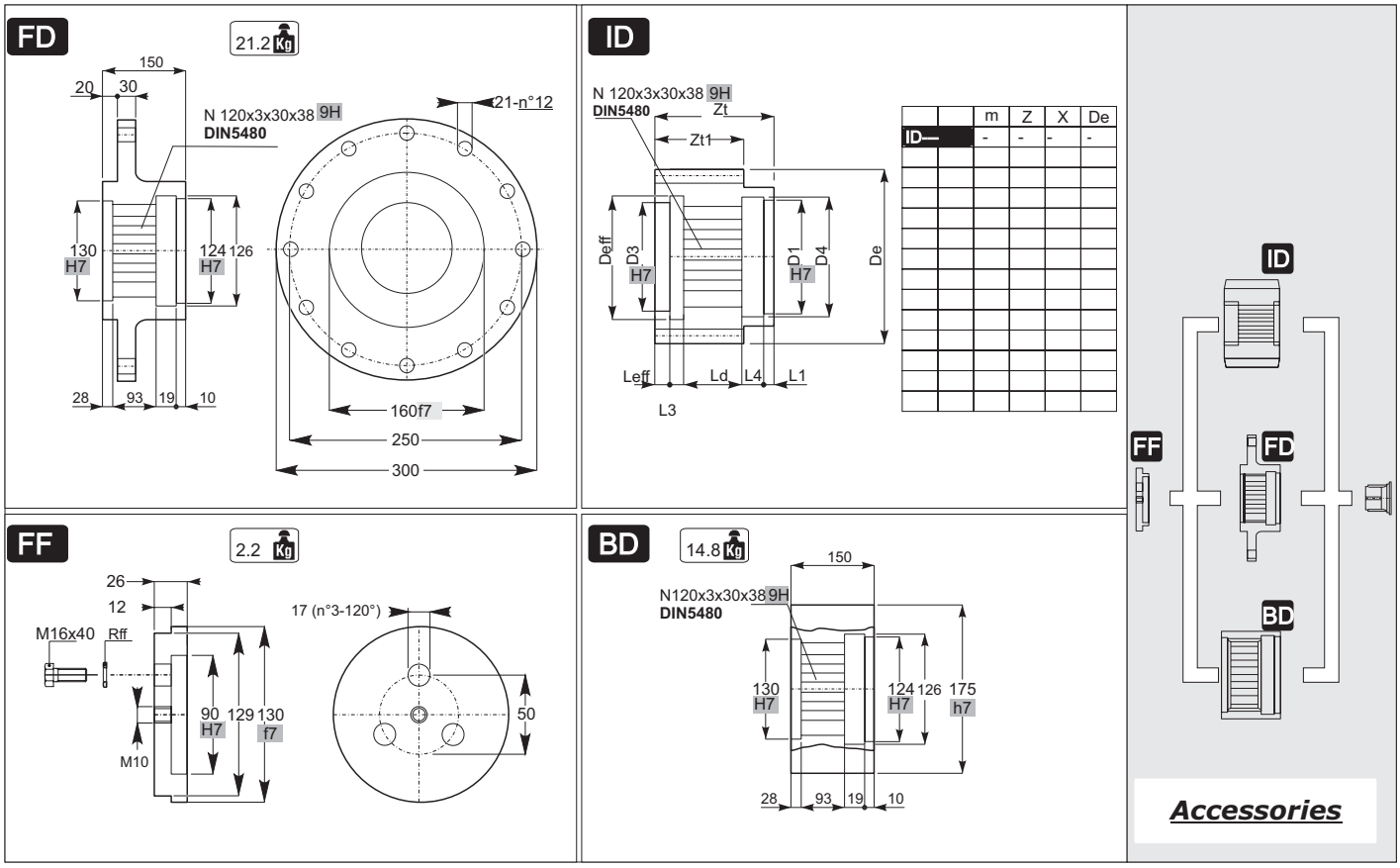
FD
21.2 Kg
150
20
30
N 120x3x30x38 9H
DIN5480
21-n°12
130 H7
124 H7
126
28
93
19
10
160f7
250
300
ID
N 120x3x30x38 9H
DIN5480
Zt
Zt1
Deff
D3 H7
D1 H7
D4
De
Leff
Ld
L4
L1
L3
m
Z
X
De
ID—
FF
2.2 Kg
26
12
M16x40
Rff
17 (n°3-120°)
90 H7
129
130 f7
50
M10
BD
14.8 Kg
150
N120x3x30x38 9H
DIN5480
130 H7
124 H7
126
175 h7
28
93
19
10
ID
FF
FD
BD
Accessories

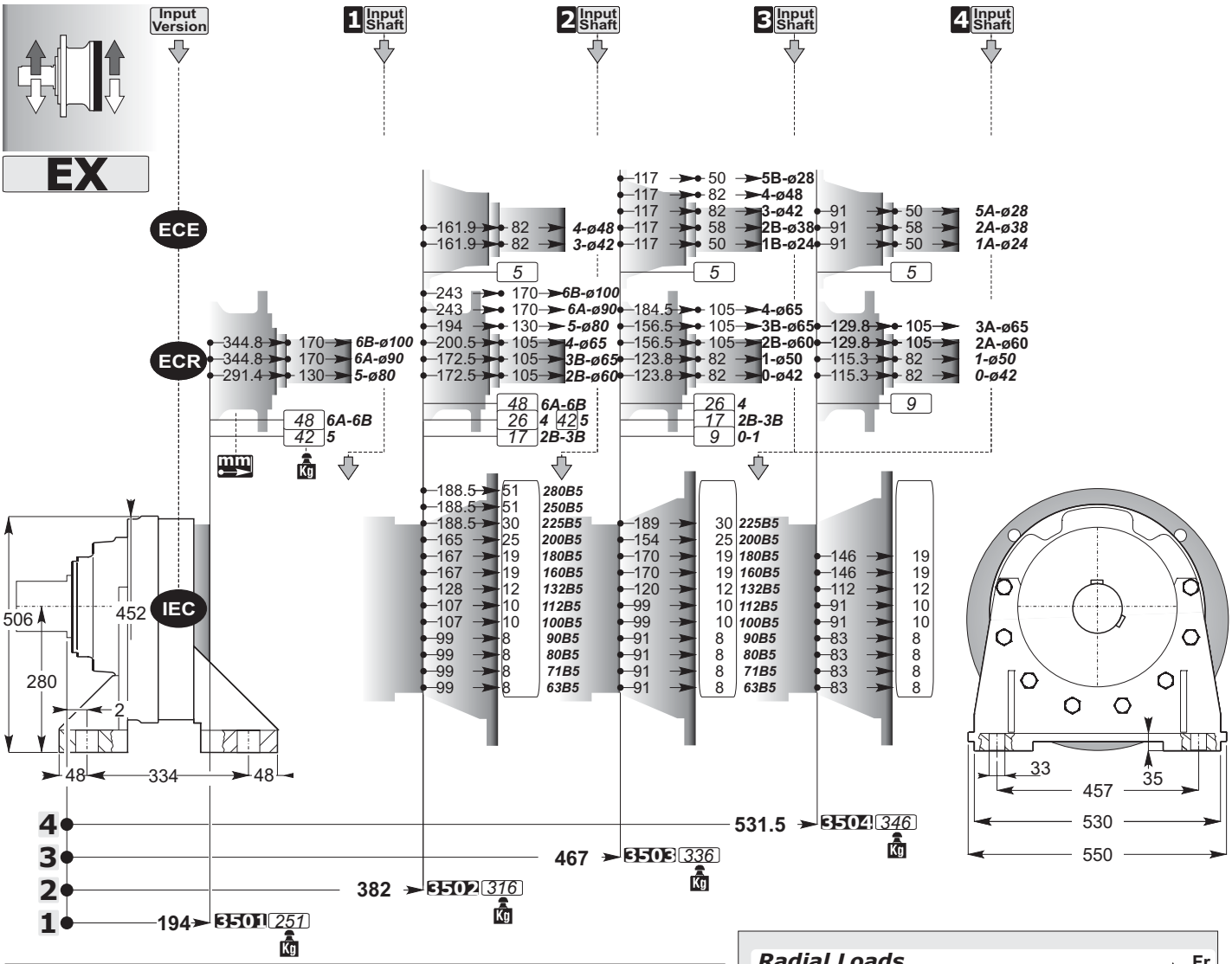
Input Version
1 Input Shaft
2 Input Shaft
3 Input Shaft
4 Input Shaft
EX
ECE
ECR
IEC
161.9 82 4-ø48
161.9 82 3-ø42
5
243 170 6B-ø100
243 170 6A-ø90
194 130 5-ø80
200.5 105 4-ø65
172.5 105 3B-ø65
172.5 105 2B-ø60
48 6A-6B
26 4 42 5
17 2B-3B
344.8 170 6B-ø100
344.8 170 6A-ø90
291.4 130 5-ø80
48 6A-6B
42 5
117 50 5B-ø28
117 82 4-ø48
117 82 3-ø42
117 58 2B-ø38
117 50 1B-ø24
5
184.5 105 4-ø65
156.5 105 3B-ø65
156.5 105 2B-ø60
123.8 82 1-ø50
123.8 82 0-ø42
26 4
17 2B-3B
9 0-1
91 50 5A-ø28
91 58 2A-ø38
91 50 1A-ø24
5
129.8 105 3A-ø65
129.8 105 2A-ø60
115.3 82 1-ø50
115.3 82 0-ø42
9
188.5 51 280B5
188.5 51 250B5
188.5 30 225B5
165 25 200B5
167 19 180B5
167 19 160B5
128 12 132B5
107 10 112B5
107 10 100B5
99 8 90B5
99 8 80B5
99 8 71B5
99 8 63B5
189 30 225B5
154 25 200B5
170 19 180B5
170 19 160B5
120 12 132B5
99 10 112B5
99 10 100B5
91 8 90B5
91 8 80B5
91 8 71B5
91 8 63B5
146 19
146 19
112 12
91 10
91 10
83 8
83 8
83 8
83 8
506
452
280
2
48
334
48
33
35
457
530
550
4
3
2
1
531.5 3504 346
467 3503 336
382 3502 316
194 3501 251

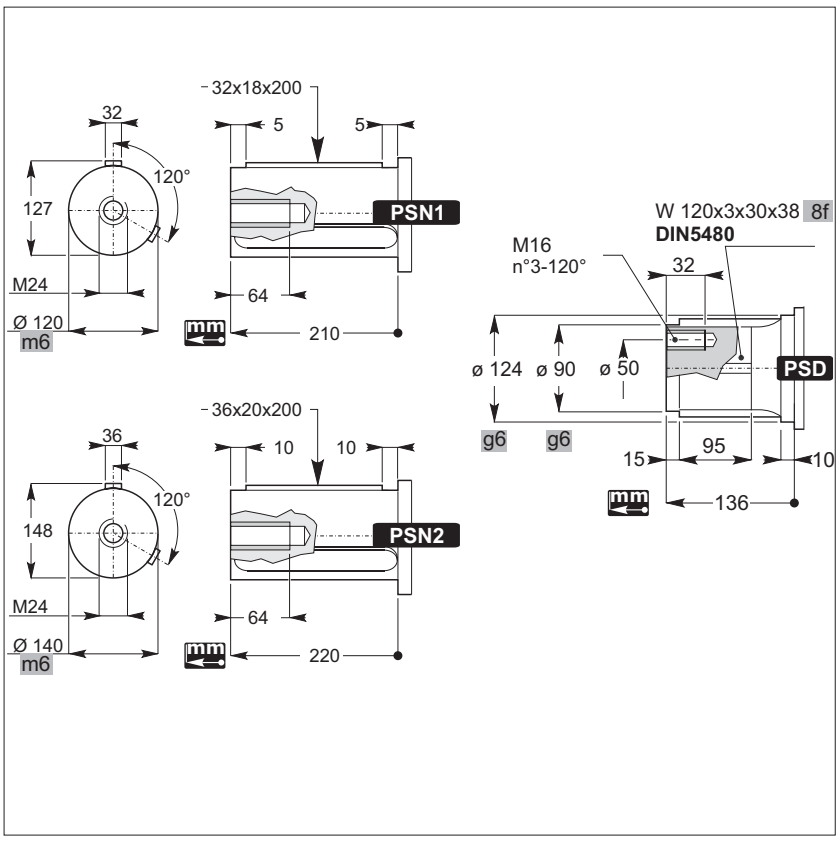
32x18x200
32
5
5
120°
127
PSN1
M24
64
Ø 120
m6
210
W 120x3x30x38 8f
DIN5480
M16
n°3-120°
32
ø 124
ø 90
ø 50
PSD
g6
g6
15
95
10
136
36x20x200
36
10
10
120°
148
PSN2
M24
64
Ø 140
m6
220

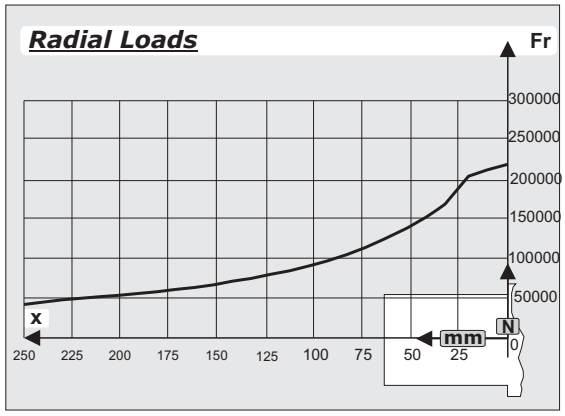
Radial Loads
Fr
300000
250000
200000
150000
100000
50000
0
x
250
225
200
175
150
125
100
75
50
25
mm
N

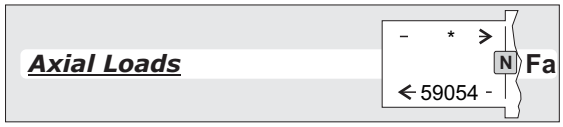
Axial Loads
N
Fa
59054

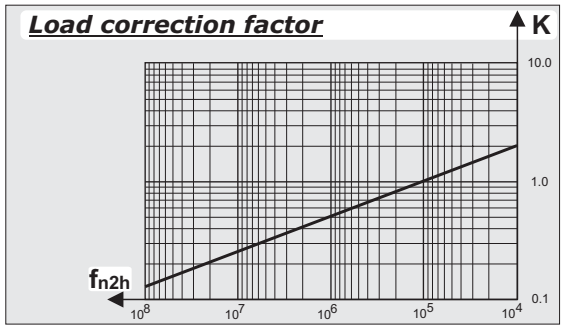
Load correction factor
K
10.0
1.0
0.1
fn2h
10^8
10^7
10^6
10^5
10^4

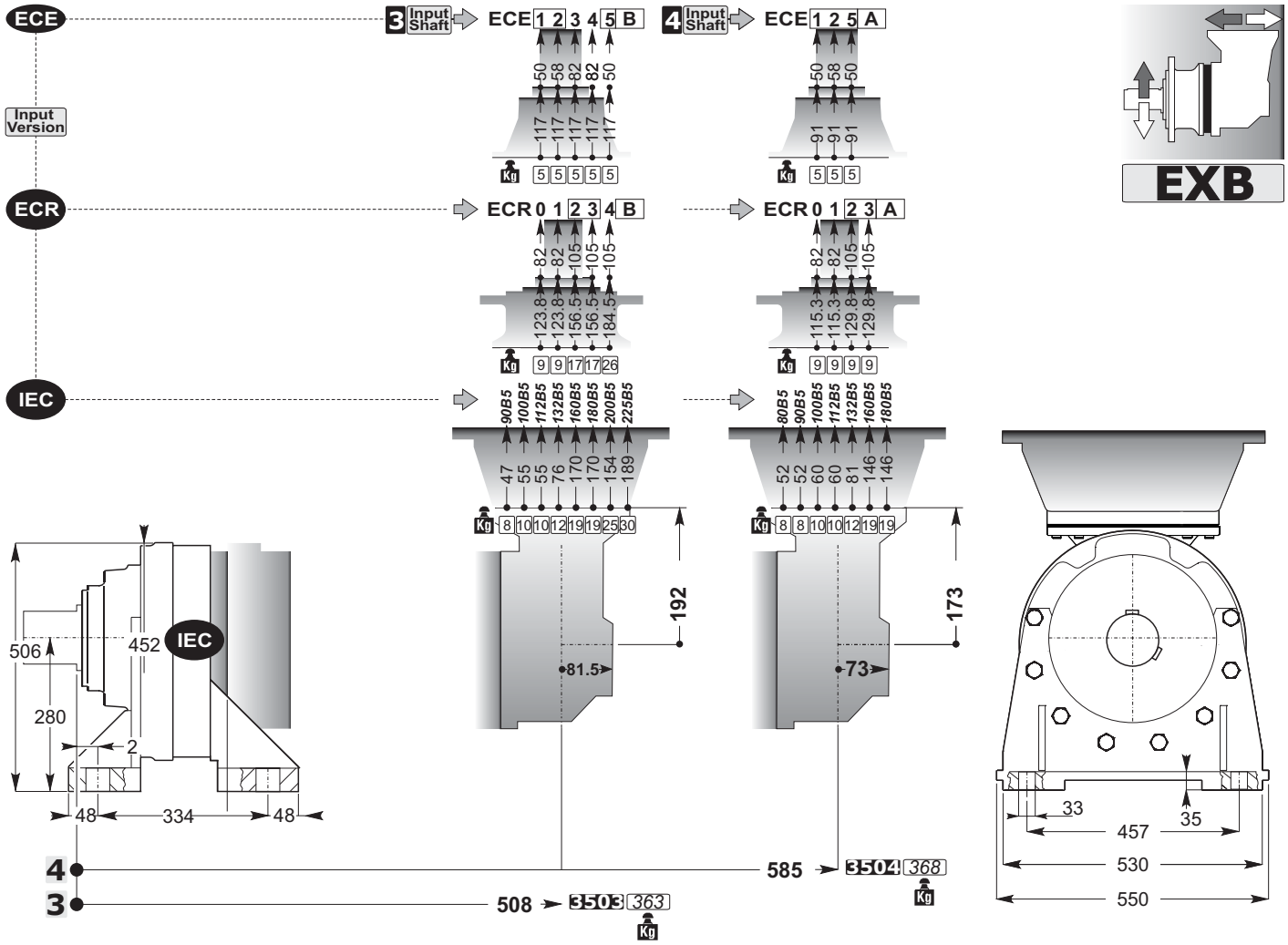
ECE
Input Version
ECR
IEC
3 Input Shaft
ECE 1 2 3 4 5 B
4 Input Shaft
ECE 1 2 5 A
ECR 0 1 2 3 4 B
ECR 0 1 2 3 A
EXB
90B5 100B5 112B5 132B5 160B5 180B5 200B5 225B5
80B5 90B5 100B5 112B5 132B5 160B5 180B5
192
173
81.5
73
506
452
280
2
48
334
48
33
35
457
530
550
585
3504 368
508
3503 363

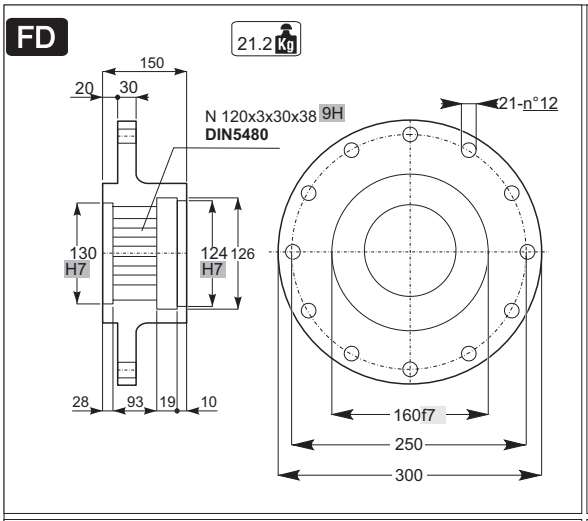
FD
21.2 Kg
150
20
30
N 120x3x30x38 9H
DIN5480
21-n°12
130 H7
124 H7
126
28
93
19
10
160f7
250
300

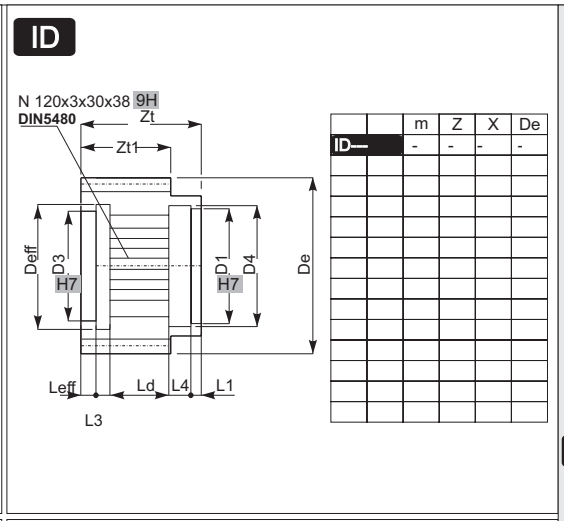
ID
N 120x3x30x38 9H
DIN5480
Zt
Zt1
Deff
D3 H7
D1 H7
D4
De
Leff
Ld
L4
L1
L3

	m	Z	X	De
ID—	-	-	-	-

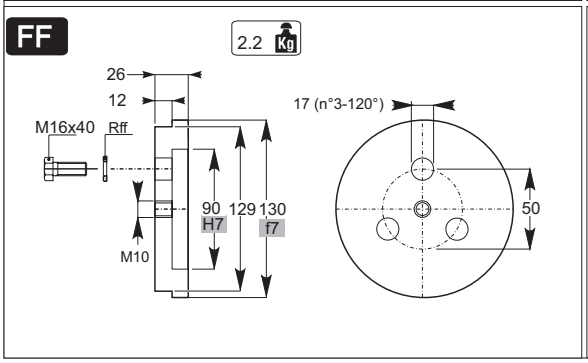
FF
2.2 Kg
26
12
M16x40
Rff
17 (n°3-120°)
90 H7
129
130 f7
M10
50

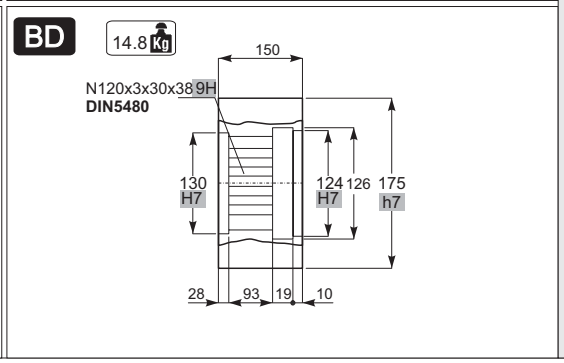
BD
14.8 Kg
150
N120x3x30x38 9H
DIN5480
130 H7
124 H7
126
175 h7
28
93
19
10

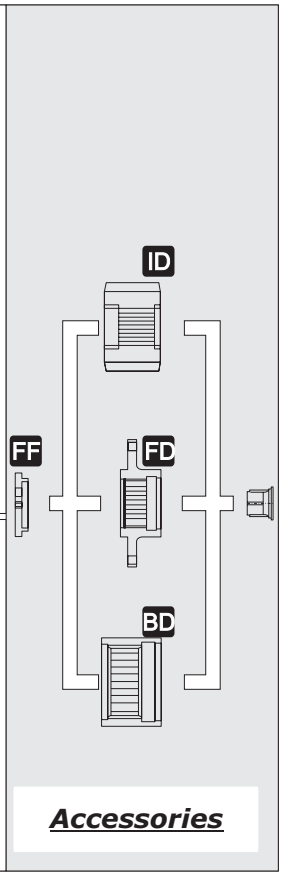
ID
FF
FD
BD
Accessories

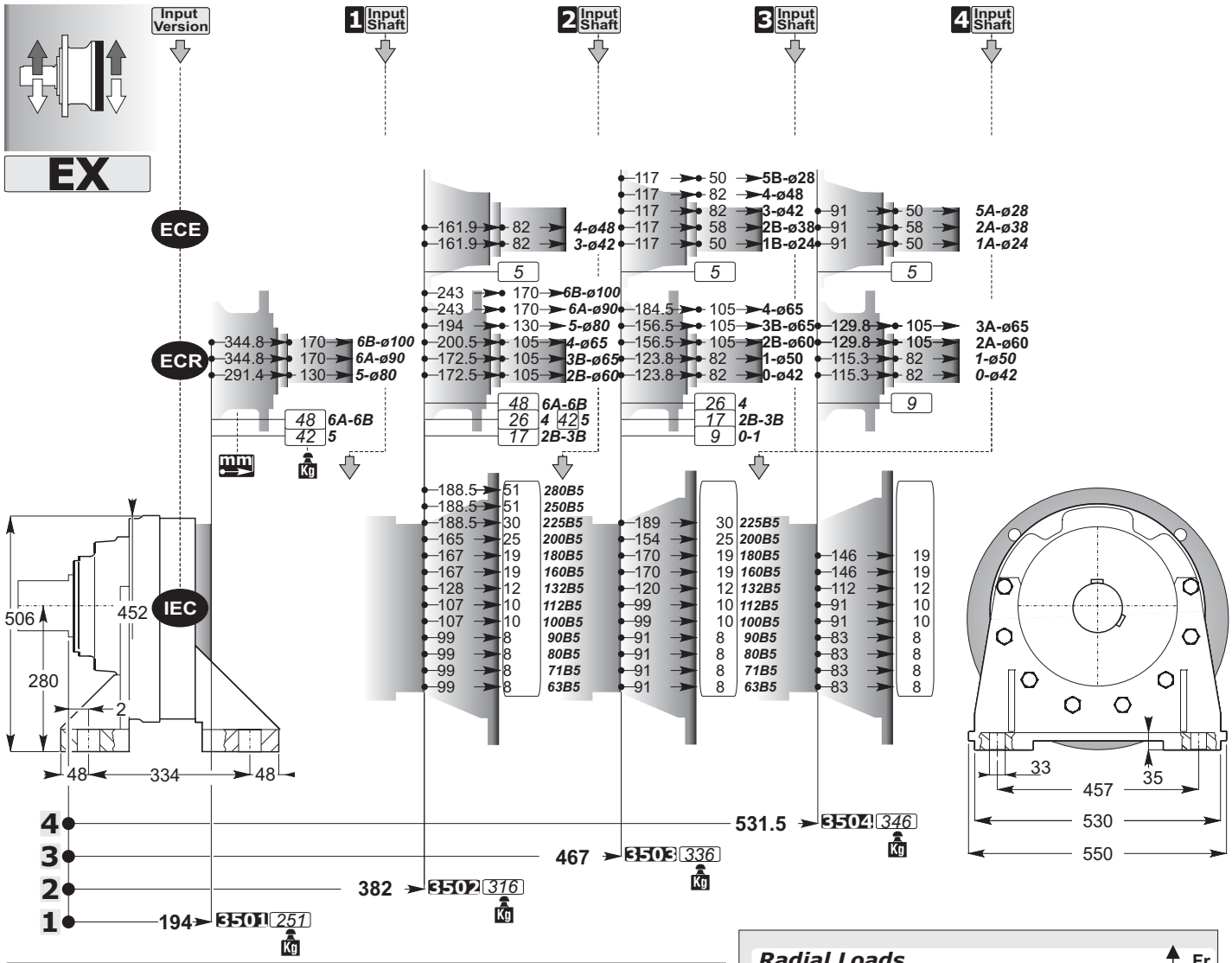
Input Version
1 Input Shaft
2 Input Shaft
3 Input Shaft
4 Input Shaft
EX
ECE
ECR
IEC
161.9 82 4-ø48
161.9 82 3-ø42
5
243 170 6B-ø100
243 170 6A-ø90
194 130 5-ø80
200.5 105 4-ø65
172.5 105 3B-ø65
172.5 105 2B-ø60
48 6A-6B
26 4 42 5
17 2B-3B
344.8 170 6B-ø100
344.8 170 6A-ø90
291.4 130 5-ø80
48 6A-6B
42 5
117 50 5B-ø28
117 82 4-ø48
117 82 3-ø42
117 58 2B-ø38
117 50 1B-ø24
5
184.5 105 4-ø65
156.5 105 3B-ø65
156.5 105 2B-ø60
123.8 82 1-ø50
123.8 82 0-ø42
26 4
17 2B-3B
9 0-1
91 50 5A-ø28
91 58 2A-ø38
91 50 1A-ø24
5
129.8 105 3A-ø65
129.8 105 2A-ø60
115.3 82 1-ø50
115.3 82 0-ø42
9
188.5 51 280B5
188.5 51 250B5
188.5 30 225B5
165 25 200B5
167 19 180B5
167 19 160B5
128 12 132B5
107 10 112B5
107 10 100B5
99 8 90B5
99 8 80B5
99 8 71B5
99 8 63B5
189 30 225B5
154 25 200B5
170 19 180B5
170 19 160B5
120 12 132B5
99 10 112B5
99 10 100B5
91 8 90B5
91 8 80B5
91 8 71B5
91 8 63B5
146 19
146 19
112 12
91 10
91 10
83 8
83 8
83 8
83 8
506
452
280
2
48 334 48
33
35
457
530
550
4
3
2
1
531.5 3504 346
467 3503 336
382 3502 316
194 3501 251
mm
Kg

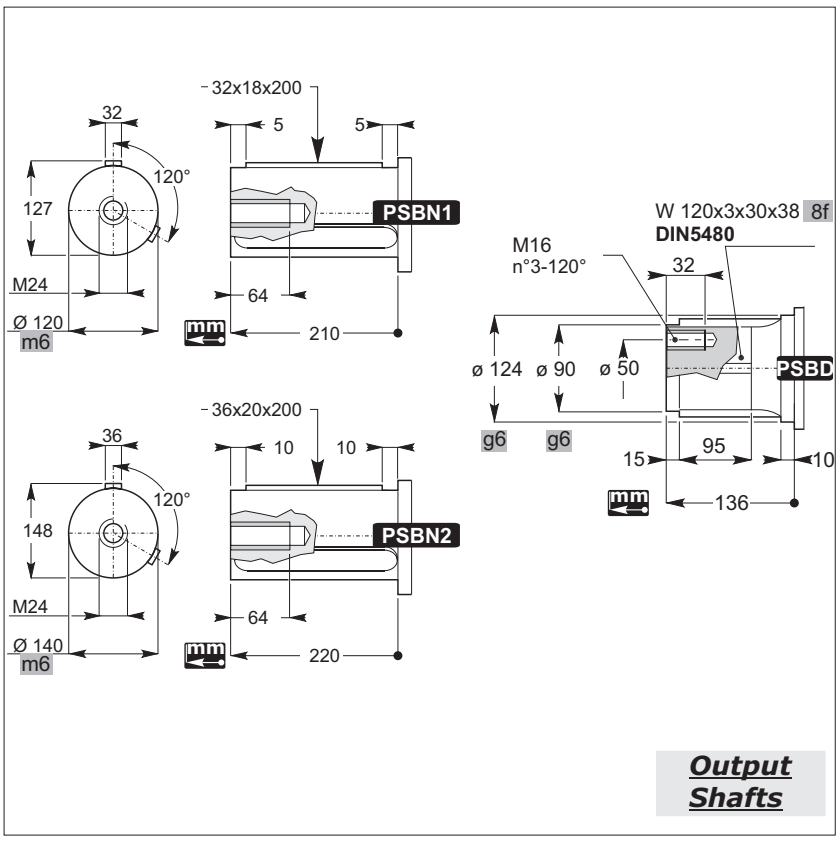
32x18x200
32
5
5
120°
127
M24
Ø 120
m6
PSBN1
64
210
mm
36x20x200
36
10
10
120°
148
M24
Ø 140
m6
PSBN2
64
220
mm
W 120x3x30x38 8f
DIN5480
M16
n°3-120°
32
ø 124
ø 90
ø 50
PSBD
g6
g6
15
95
10
136
mm
Output Shafts

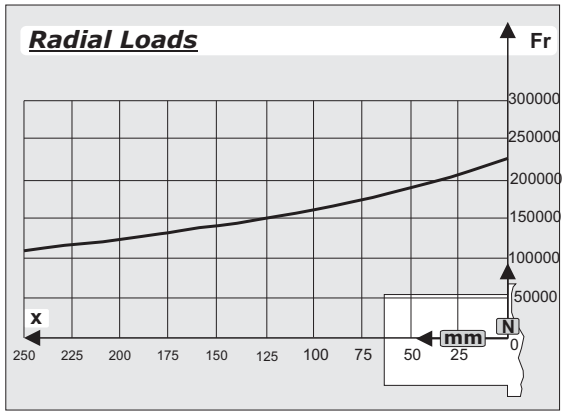
Radial Loads
Fr
300000
250000
200000
150000
100000
50000
0
x
250
225
200
175
150
125
100
75
50
25
mm
N

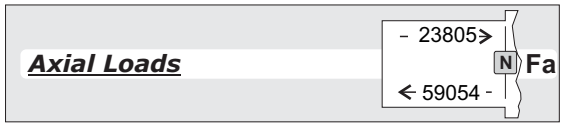
Axial Loads
23805
N
Fa
59054

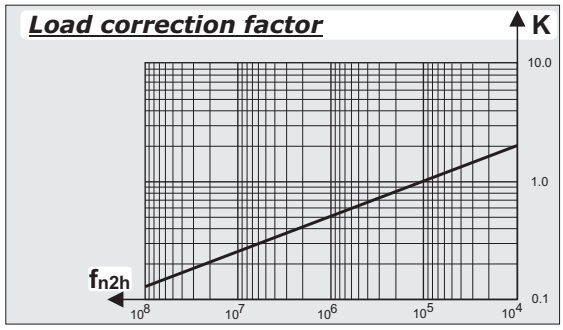
Load correction factor
K
10.0
1.0
0.1
fn2h
10^8
10^7
10^6
10^5
10^4

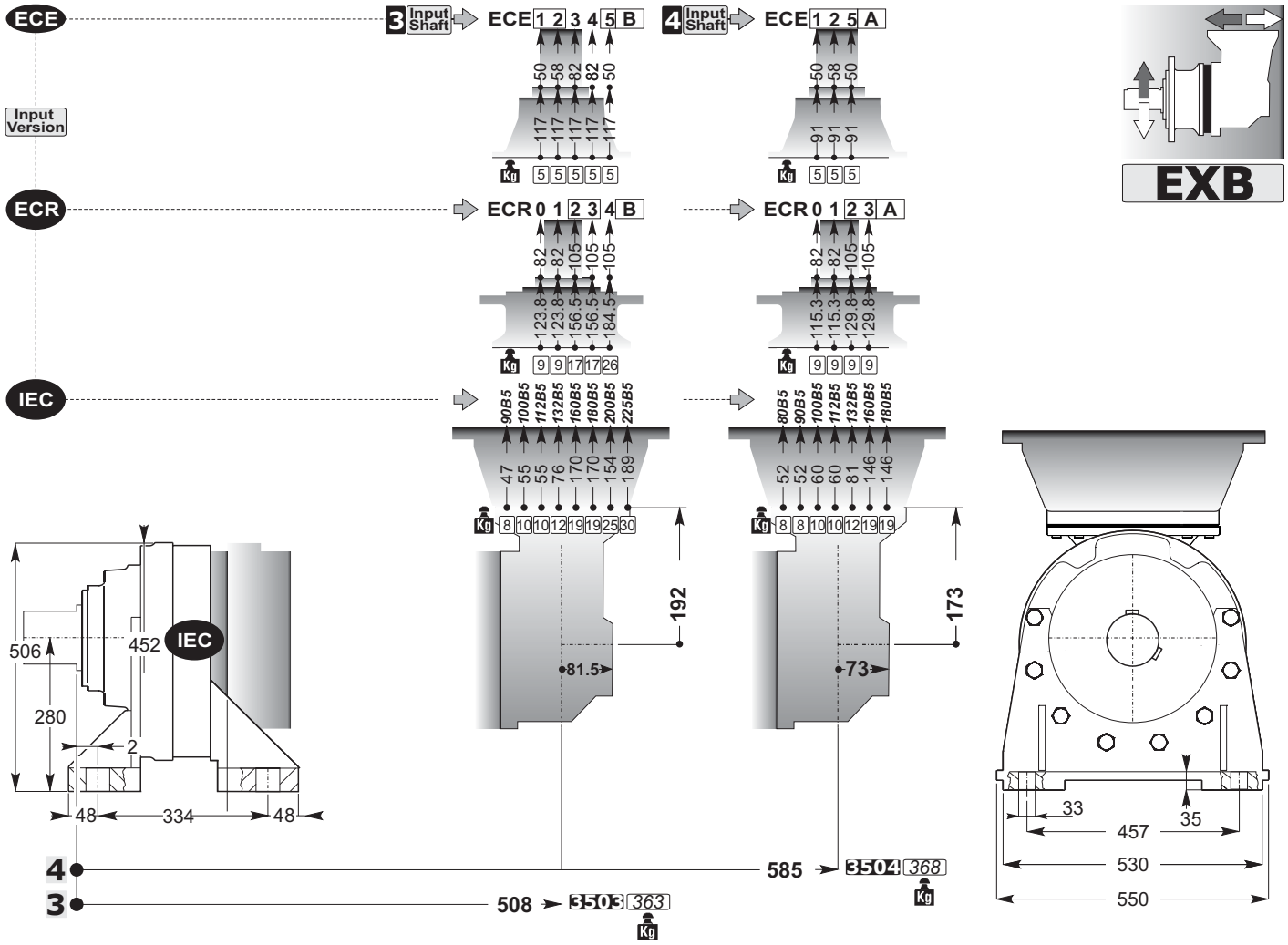

FD

21.2 Kg

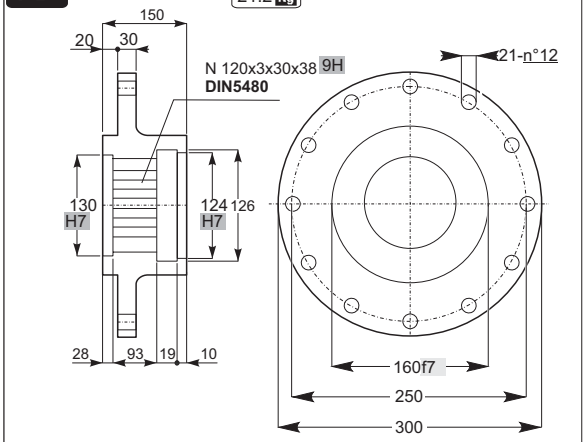

ID

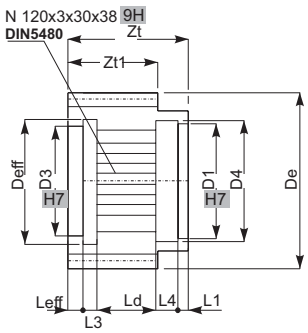

	m	Z	X	De
ID—	-	-	-	-

FF

2.2 Kg

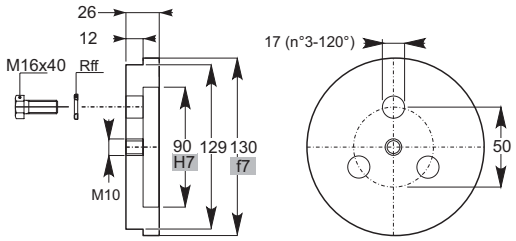

BD

14.8 Kg

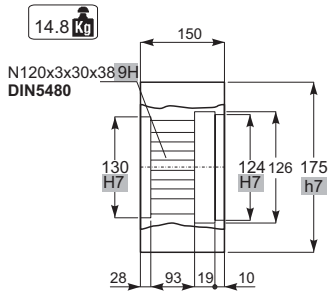

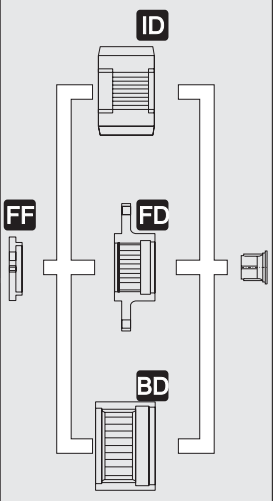

Accessories

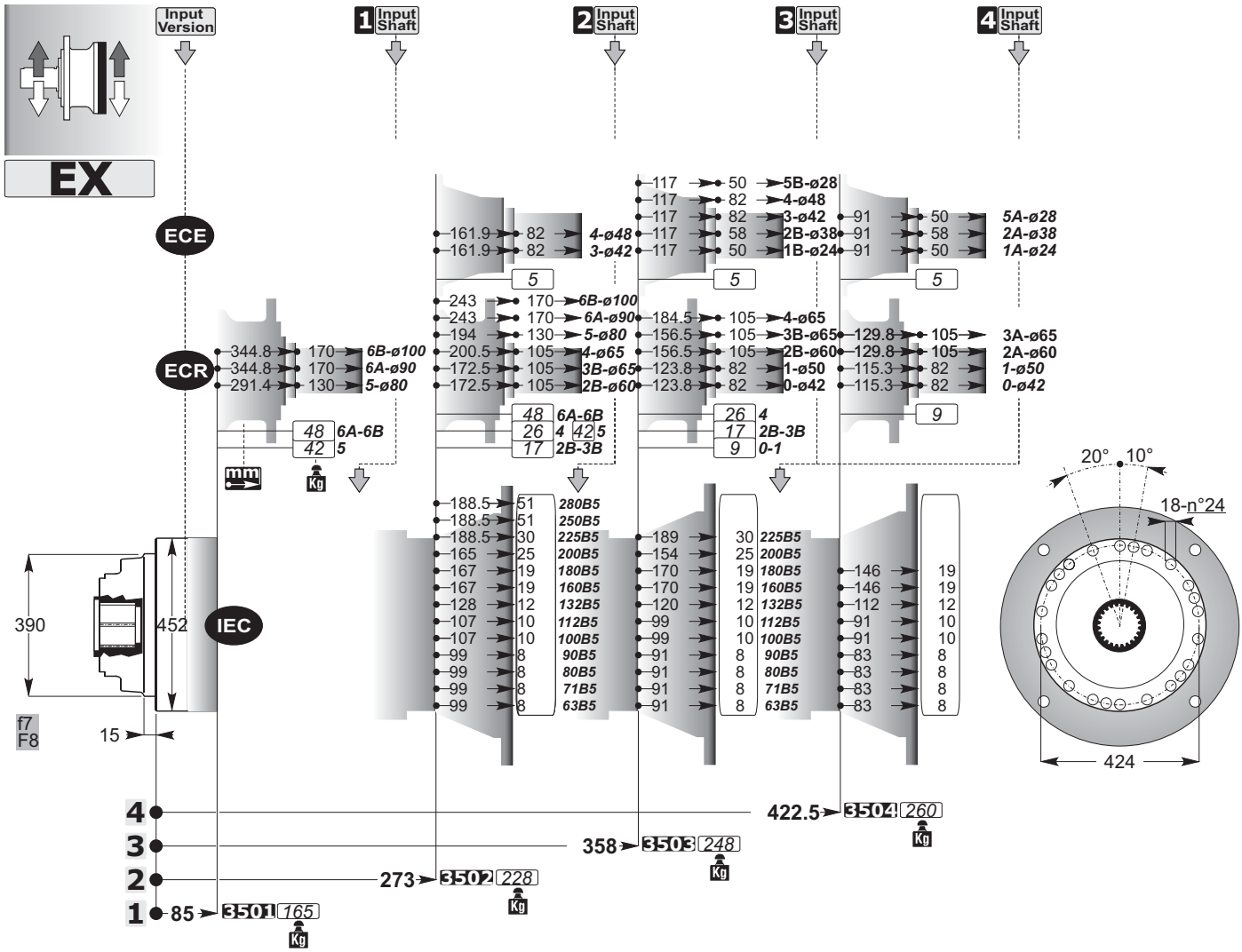
Input Version
1 Input Shaft
2 Input Shaft
3 Input Shaft
4 Input Shaft
EX
ECE
ECR
IEC
390
452
f7
F8
15
20°
10°
18-n°24
424
422.5
3504
260
358
3503
248
273
3502
228
85
3501
165
Kg
mm

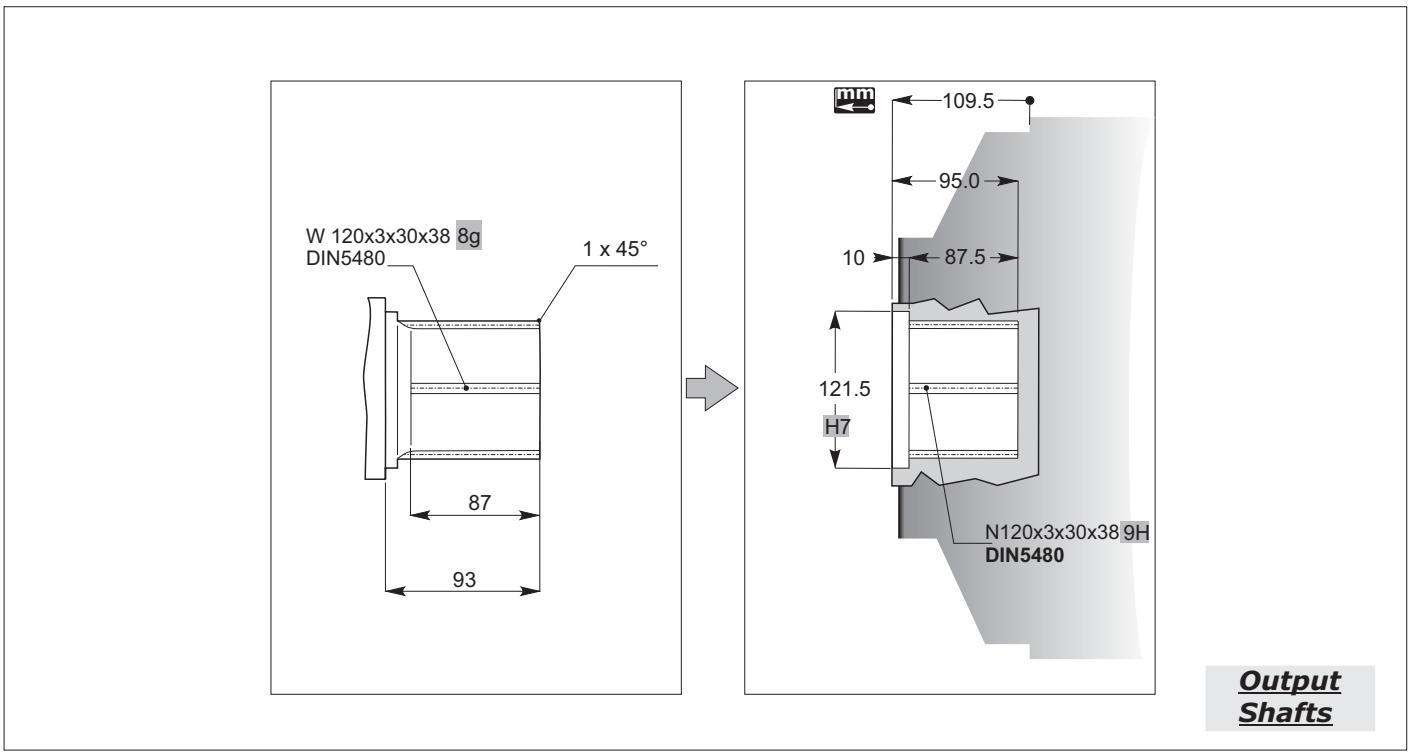
W 120x3x30x38 8g
DIN5480
1 x 45°
87
93
109.5
95.0
10
87.5
121.5
H7
N120x3x30x38 9H
DIN5480
Output Shafts

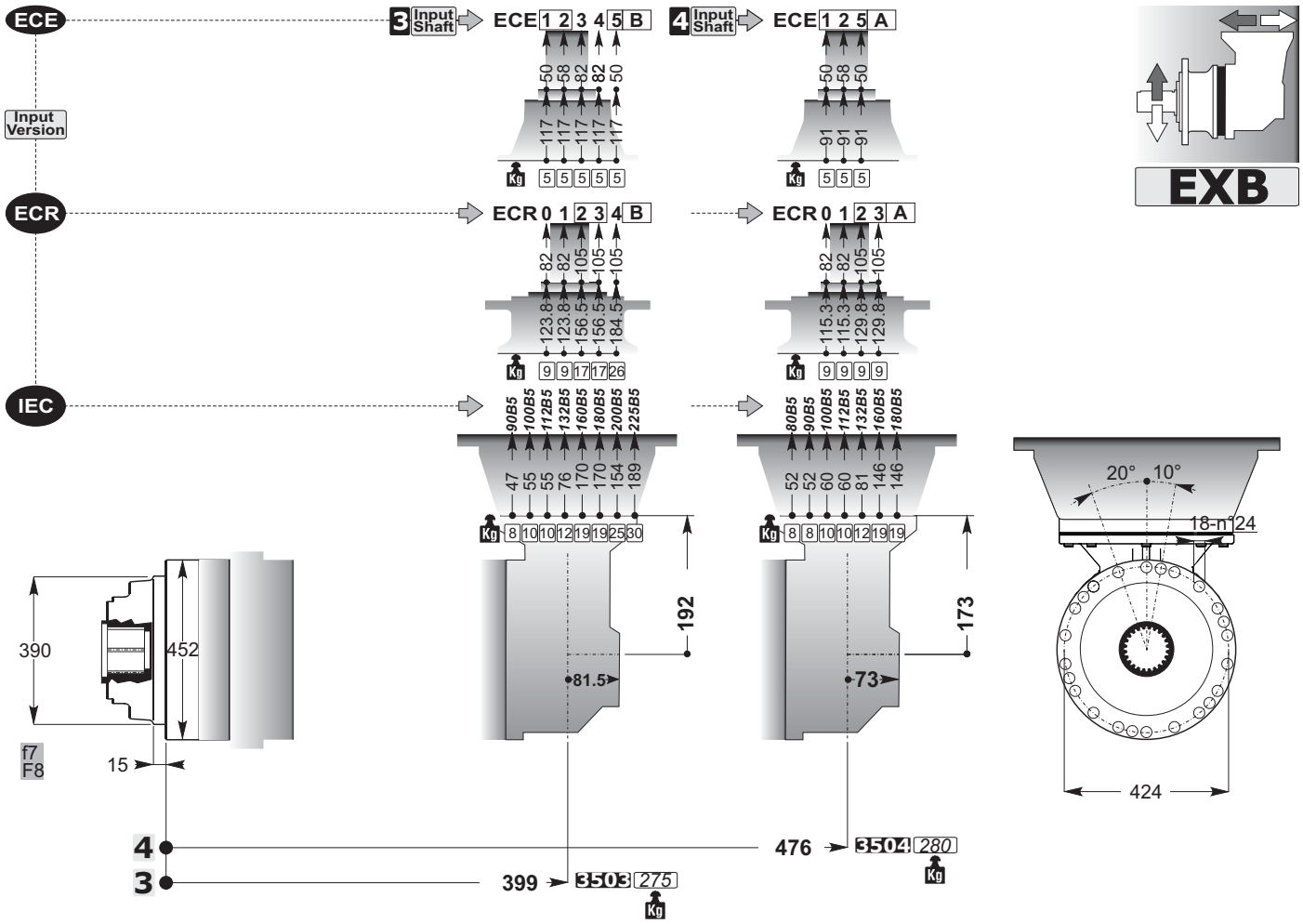

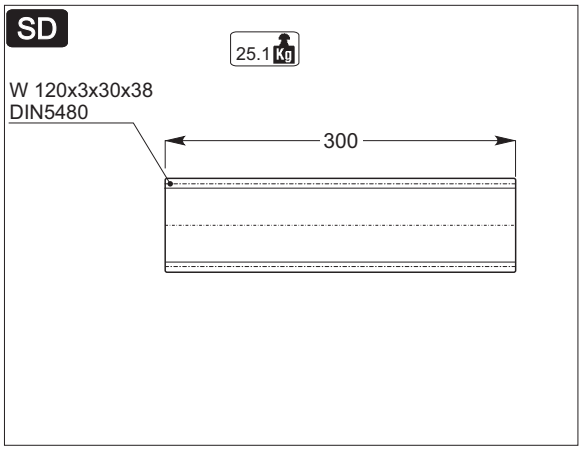

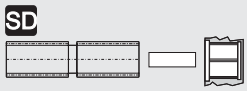

Accessories

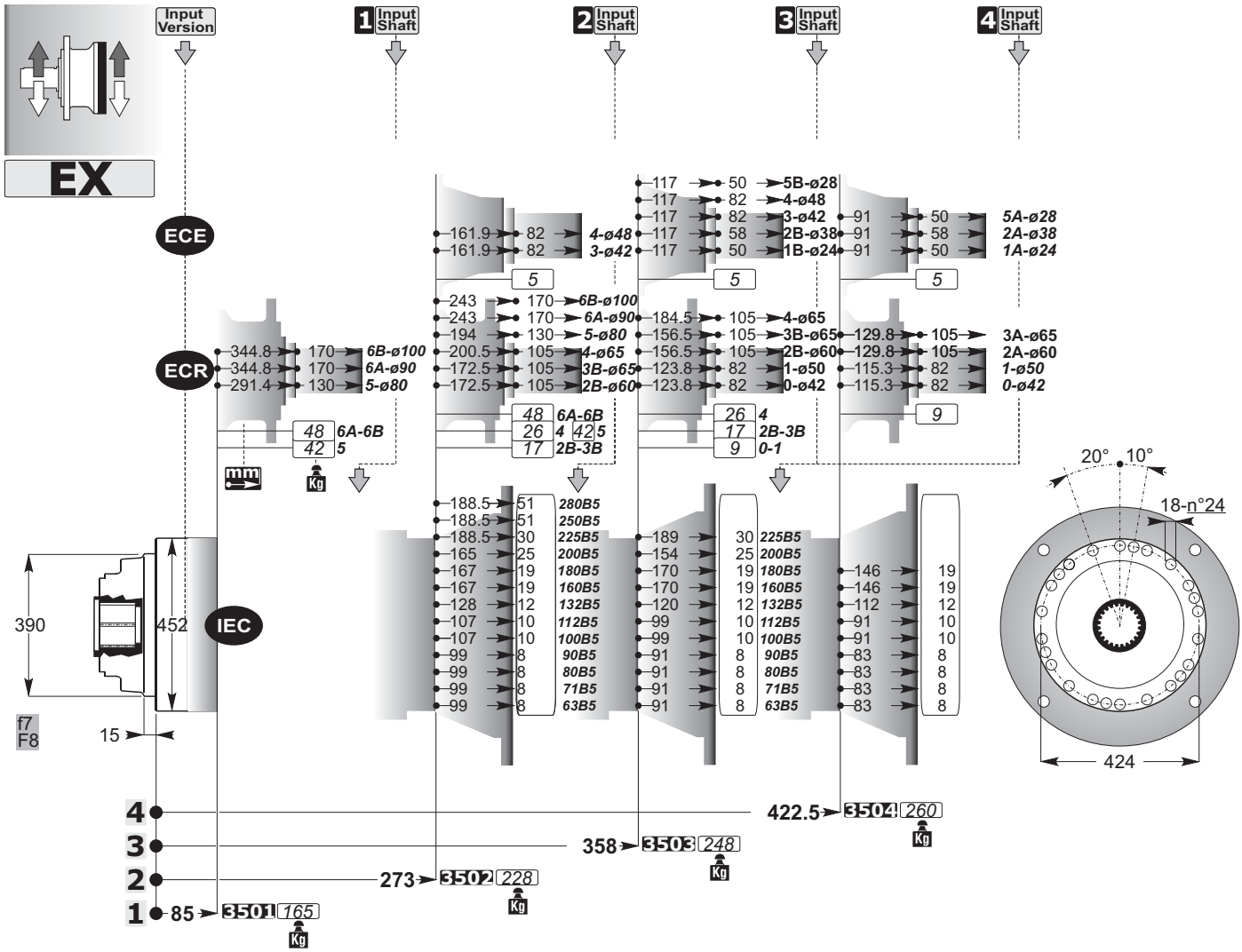

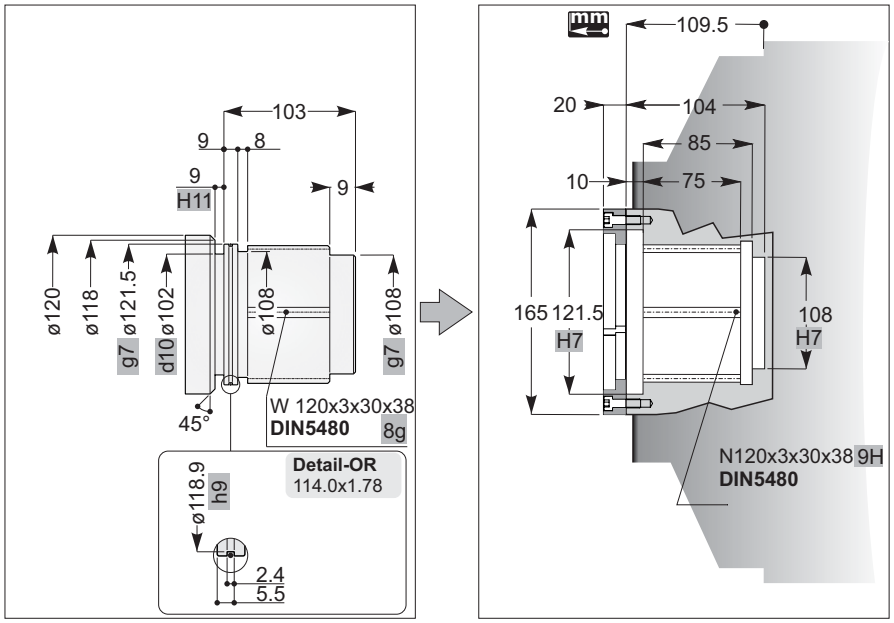

Output Shafts

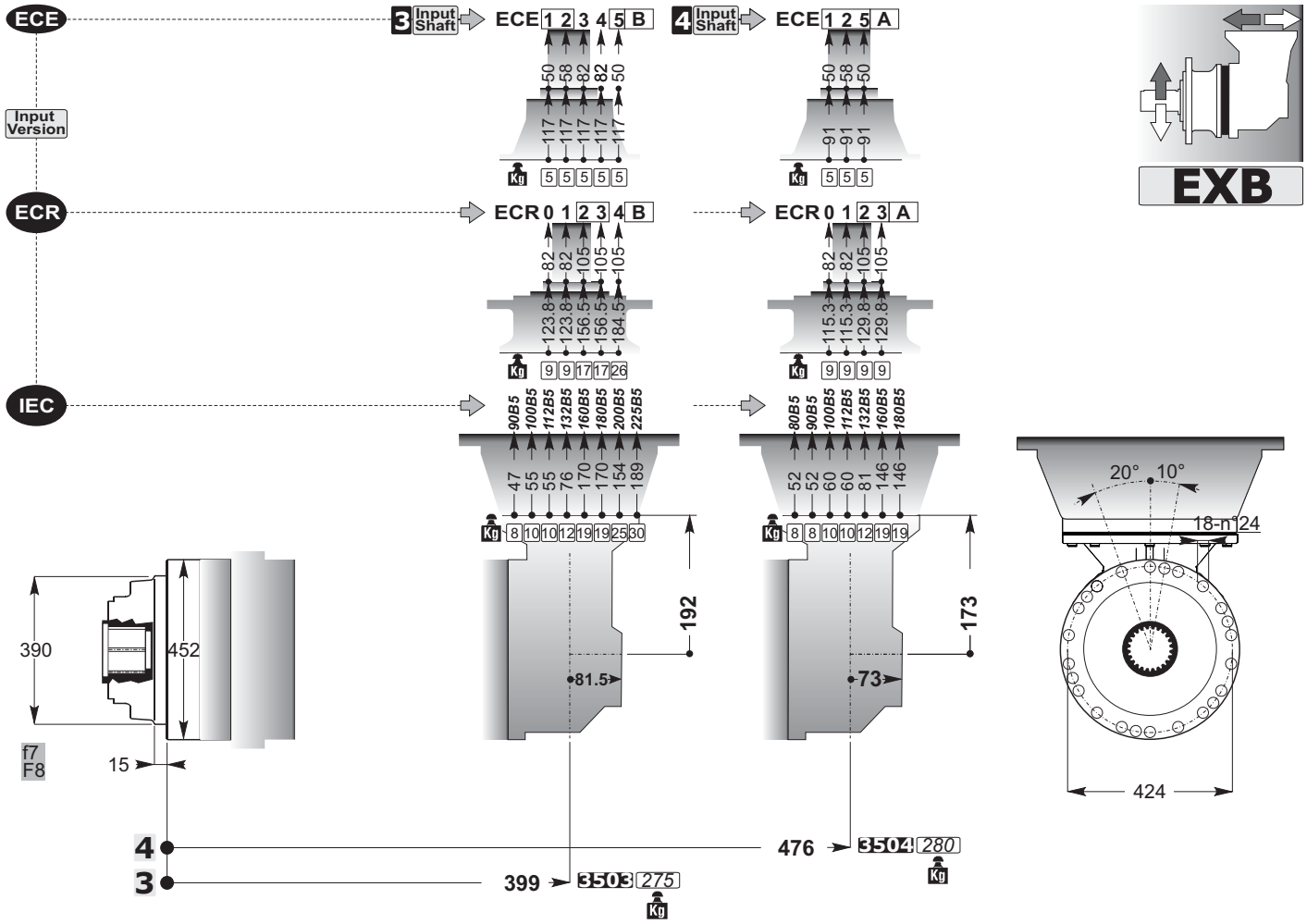
ECE
Input Version
ECR
IEC
3 Input Shaft
ECE 1 2 3 4 5 B
4 Input Shaft
ECE 1 2 5 A
ECR 0 1 2 3 4 B
ECR 0 1 2 3 A
EXB
390
452
f7
F8
15
192
81.5
173
73
20°
10°
18-n124
424
4
3
476
3504 280
399
3503 275

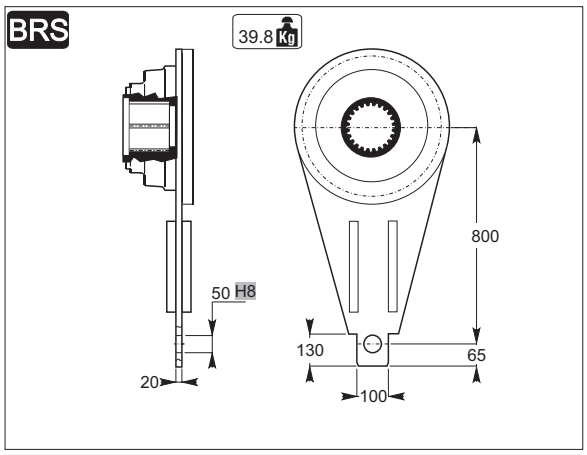
BRS
39.8 Kg
50 H8
20
800
130
65
100

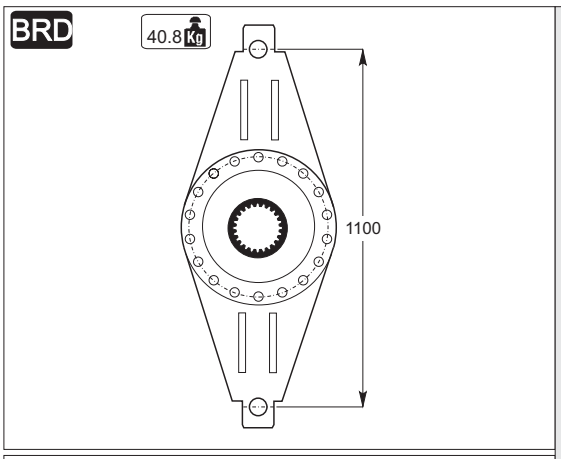
BRD
40.8 Kg
1100

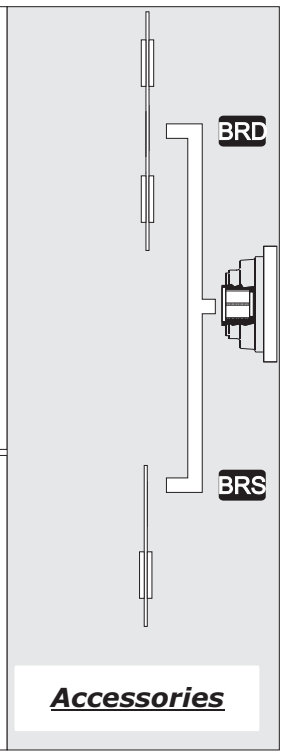
BRD
BRS
Accessories

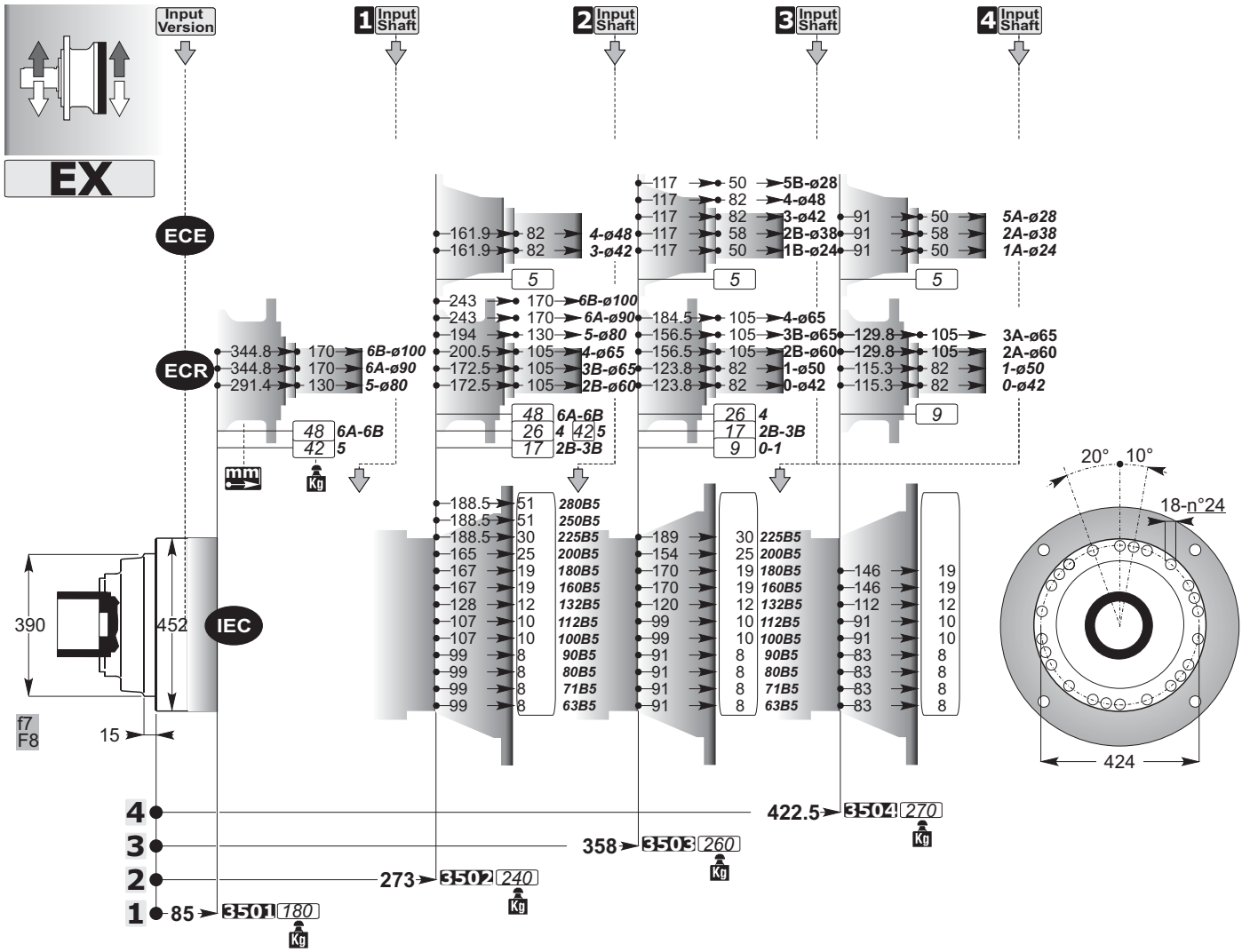

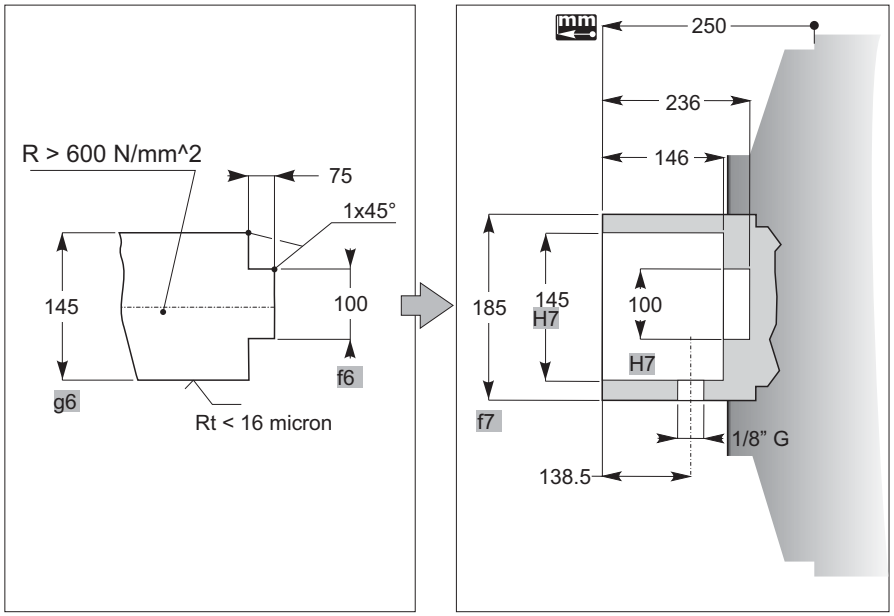

Output Shafts

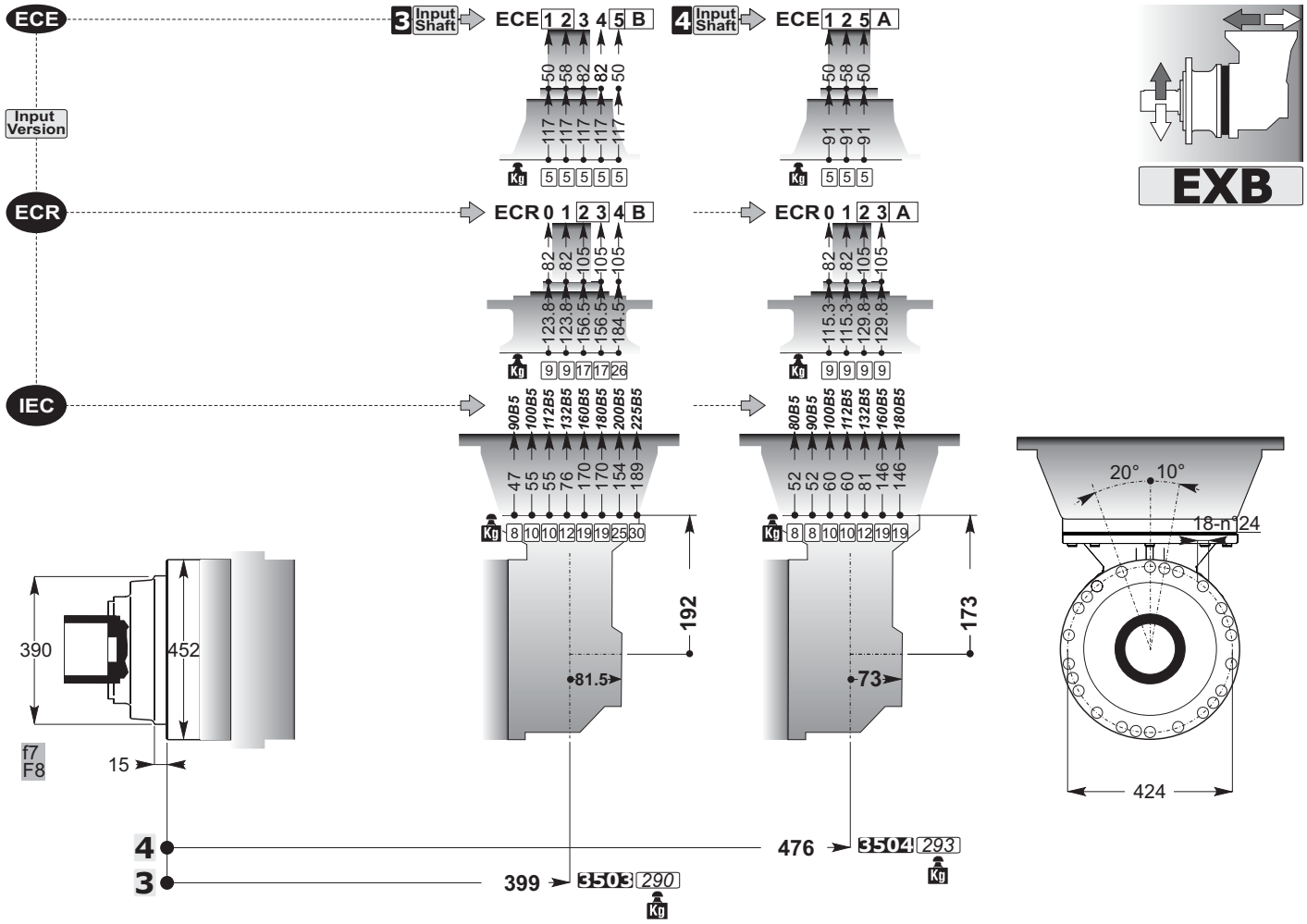
ECE
Input Version
ECR
IEC
3 Input Shaft
ECE 1 2 3 4 5 B
4 Input Shaft
ECE 1 2 5 A
ECR 0 1 2 3 4 B
ECR 0 1 2 3 A
90B5 100B5 112B5 132B5 160B5 180B5 200B5 225B5
80B5 90B5 100B5 112B5 132B5 160B5 180B5
EXB
390
452
f7
F8
15
192
81.5
173
73
20°
10°
18-n124
424
4
3
476
3504 293
399
3503 290

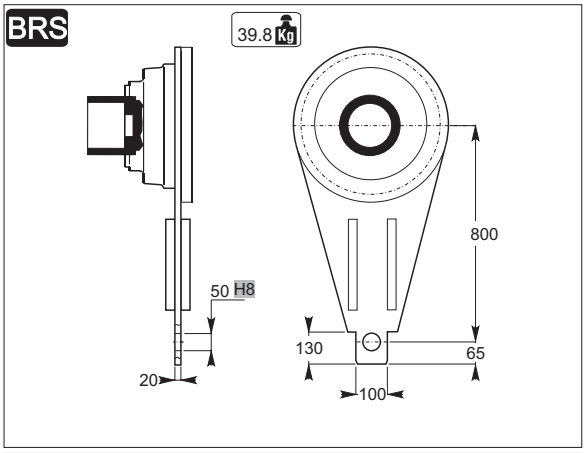
BRS
39.8 Kg
50 H8
20
800
130
65
100

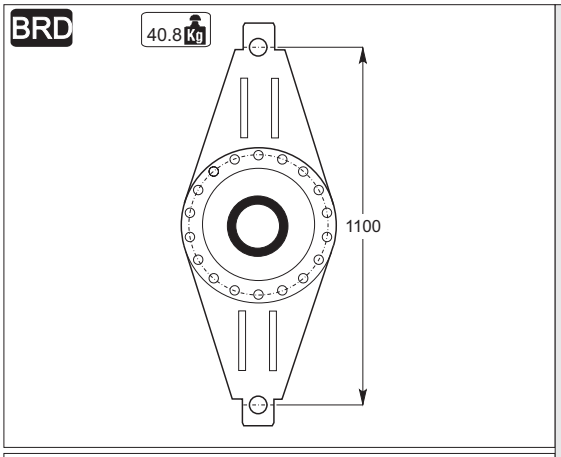
BRD
40.8 Kg
1100

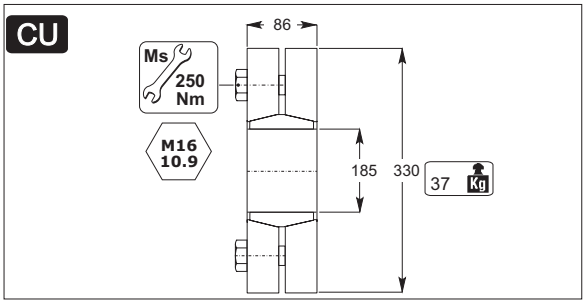
CU
Ms
250 Nm
M16
10.9
86
185
330
37 Kg

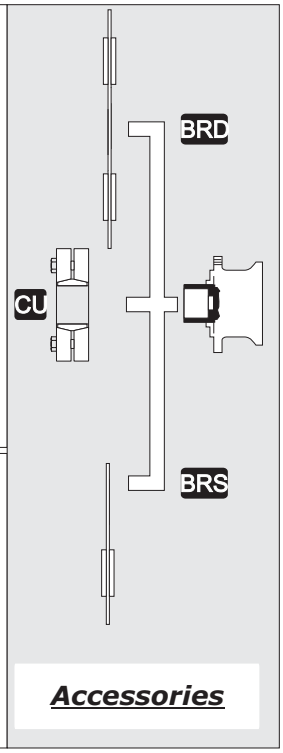
BRD
CU
BRS
Accessories